TL-24 / TL-27 / TL-30

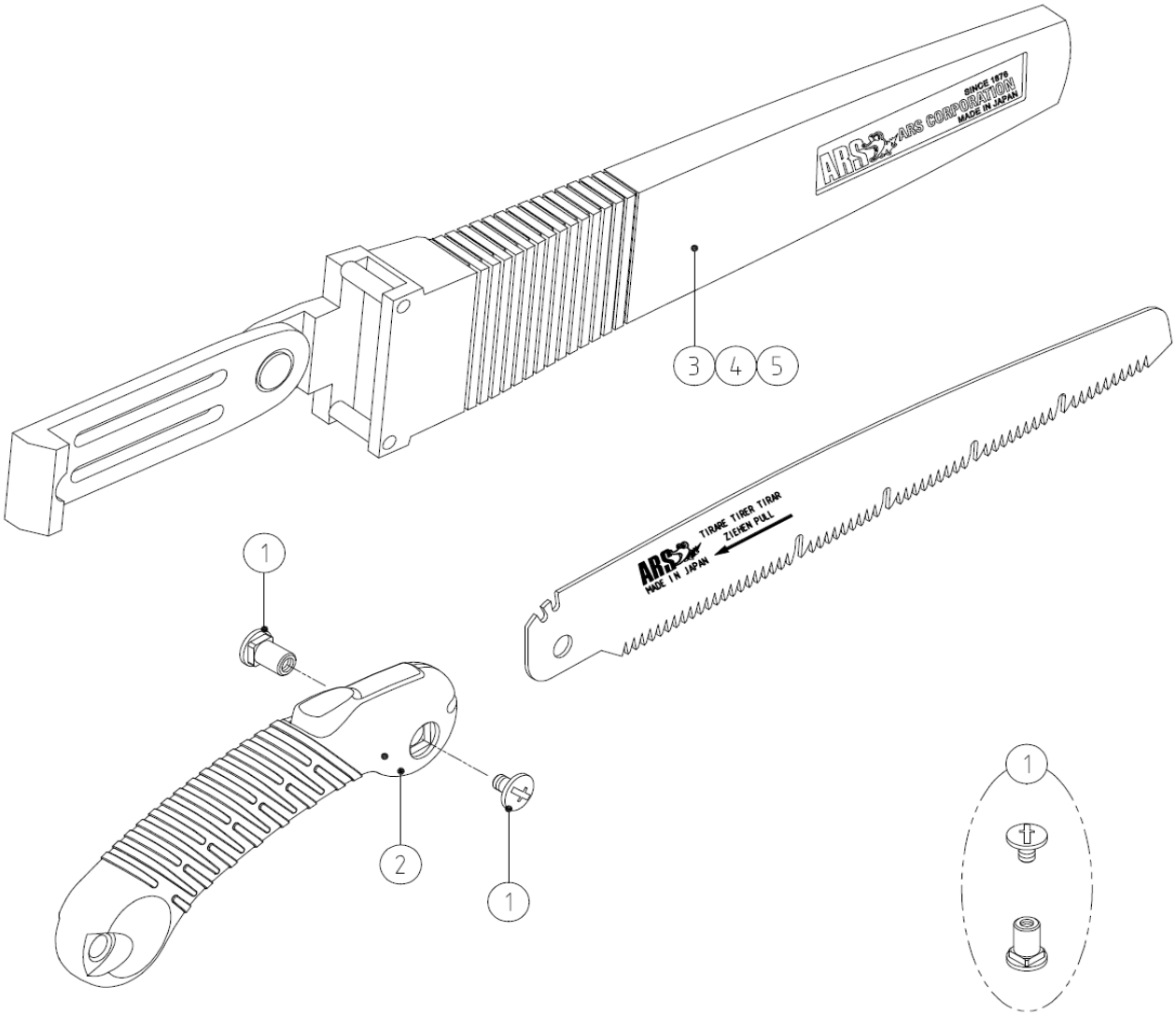


| PARTS NO. | SPECIFICATION | PARTS NO. | SPECIFICATION |
|---|---|---|---|
| ① SP-50 | BOLT & NUT FOR TL-24/27/30 | | |
| ② SP-289 | GRIP FOR TL-24/27/30 | | |
| ③ SP-274 | SHEATH FOR TL-24 | | |
| ④ SP-286 | SHEATH FOR TL-27 | | |
| ⑤ SP-287 | SHEATH FOR TL-30 | | |