DUKE-25

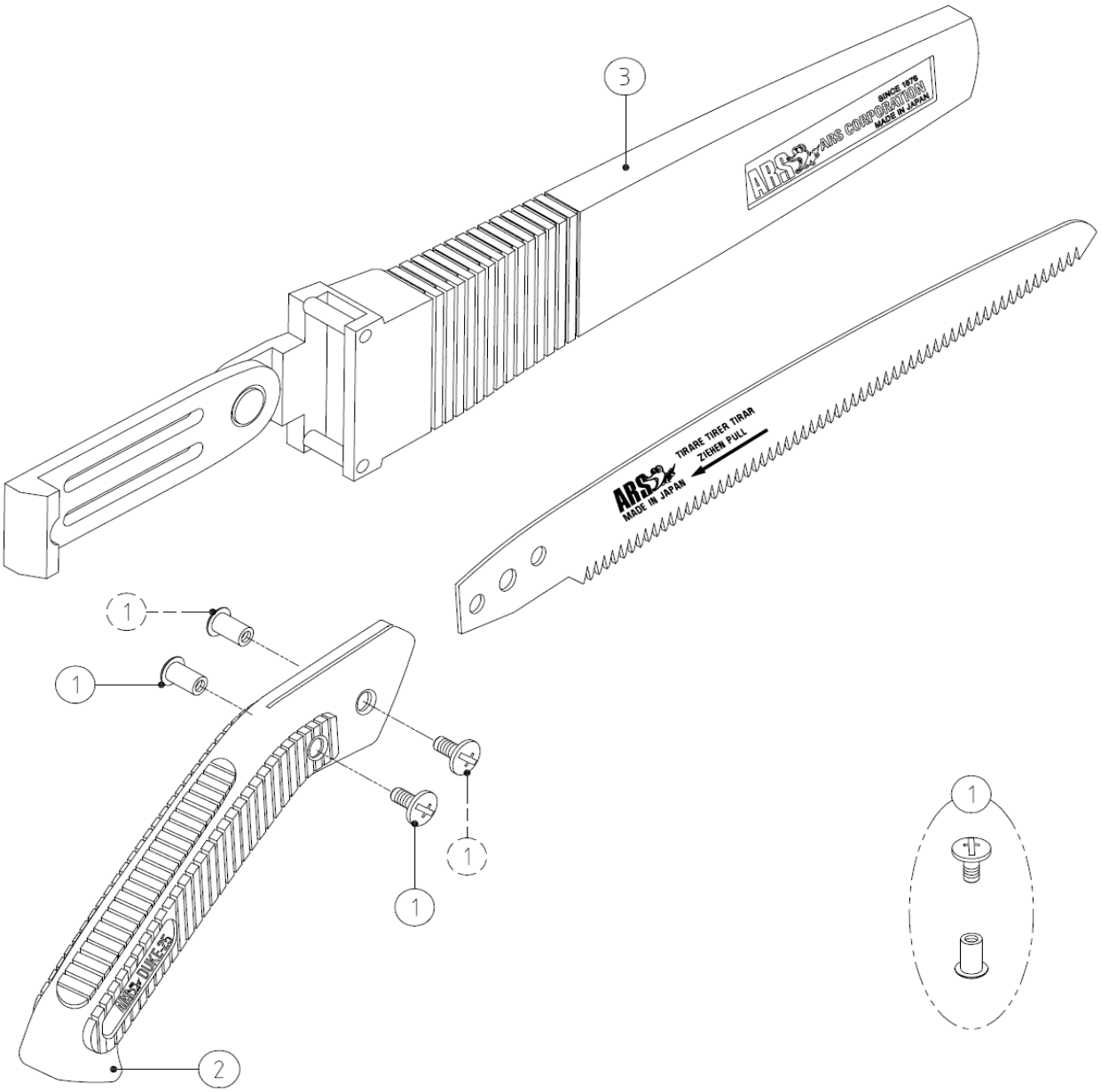

PARTS NO.	SPECIFICATION	PARTS NO.	SPECIFICATION
① SP-266	BOLT & NUT FOR DUKE-25 (1PC EACH)		
② SP-267	GRIP FOR DUKE-25		
③ SP-268	SHEATH FOR DUKE-25		