CT-32E-W / UV-32E-W

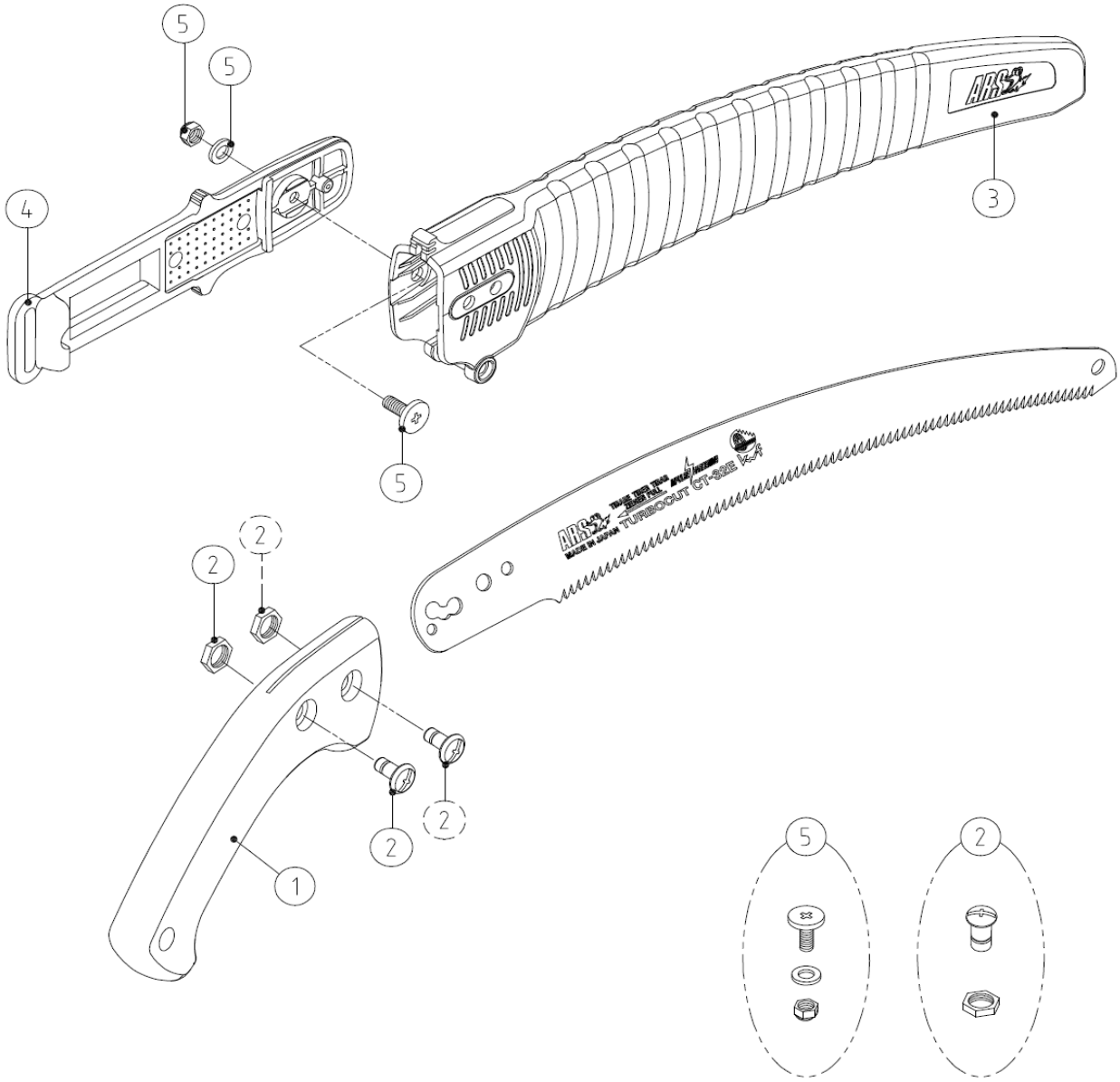


| PARTS NO. | SPECIFICATION | PARTS NO. | SPECIFICATION |
|---|---|---|---|
| ① SP-378 | WOODEN GRIP FOR CT/UV-32E-W | | |
| ② SP-126 | BOLT & NUT FOR UV-32X/XW, | | |
| | CT/UV-32E SERIES (1PC EACH) | | |
| ③ SP-406 | SHEATH FOR CT/UV-32E SERIES | | |
| | WITHOUT BELT LOOP OR ANY OTHER PART | | |
| ④ SP-407 | BELT LOOP FOR CT/UV-32E SERIES | | |
| ⑤ SP-408 | BOLT, NUT & WASHER FOR THE SHEATH OF | | |
| | CT/UV-32E SERIES | | |